AVO INTERNATIONAL LTD.
Archcliffe Road, Dover, Kent, CT17 9EN, England

TITLE: CHARGER CIRCUIT DIAGRAM
PART No. 6470-184
FIRST USED ON: DET 573R

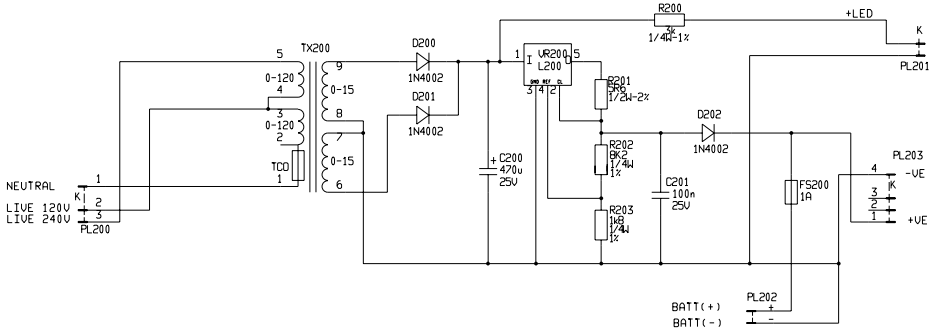

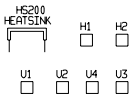

THE COPYRIGHT IN THIS DRAWING IS OWNED BY AVO INTERNATIONAL LTD. THIS DRAWING MUST NOT BE COPIED OR REPRODUCED, EITHER IN WHOLE OR IN PART, WITHOUT THE PRIOR WRITTEN CONSENT OF THE COPYRIGHT OWNER.

IF MULTIPLE SHEET DRAWING, ALL SHEETS MUST BE AT THE SAME ISSUE

ISSUE	DATE	CN No.
1	16/8/94	RELEASE

DO NOT SCALE — IF IN DOUBT ASK!
CAD DRAWING, NO MANUAL CHANGES PERMISSIBLE
DRAWN: P.SENIOR — DATE: 14-9-93
SHT. 1 OF 1 SHTS.